Internship Report

(May - July 2025)

Study the effect of pressure and thermal load on floor to frame joint

Commercial Aircraft Fuselage Structures

The Boeing Company

Aerospace Engineering Division

Submitted By,
Sonika Jain Chamarajanagar Sunilkumar
Aerospace Engineering
RV College of Engineering
Bengaluru - 560059

July 14, 2025

Contents

Table of Contents

Executive Summary **4**

1 Introduction **4**

1.1 Introduction to Boeing 4

1.2 Boeing's Core Business Segments 6

1.3 Commercial Aircraft Portfolio 7

1.4 Certification and Regulatory Compliance 9

2 Aircraft Structural Fundamentals: Impact of Thermal and Pressure Loads on Floor-to-Frame Joints **10**

2.1 Primary Structural Components 10

2.1.1 Wings 10

2.1.2 Fuselage 11

2.1.3 Empennage 13

2.2 Fuselage Design Philosophy 13

2.2.1 Semi-Monocoque Construction 13

2.2.2 Load Path Management 15

2.2.3 Fail-Safe Design 16

2.3 Pressure Loads 17

Cabin Pressurization Loads 17

Calculating Pressurization Loads 17

Pressure Differential Effects: 18

Structural Response 19

2.4 Thermal Loads 19

Loading Conditions Experienced in Aircraft 19

Effects of Thermal Loads on Floor Beams 20

Thermal Expansion and Contraction: 20

Stress Concentrations: 20

Material Selection: 20

Design Considerations: 20

Temperature Gradients: 21

Thermal Stress Development 21

2.5 Combined Load Effects 21

2.6 Floor-to-Frame Joint Analysis 22

3 Overview of the problem Statement **25**

3.1 Objectives:.....25
3.1.1 Case Study#1:.....25
3.1.2 Case Study#2:.....26
3.2 Assumptions:.....27

4. CASE STUDY#1 – Pressure loads 29
4.1 To study the effect of pressure on thin-walled circular fuselage. 29
4.1.1 Perform hand calculations to determine the stress and deformation of a thin-walled monocoque circular fuselage section subjected to pressure. 29
4.1.2 Finite Element Analysis (FEA) to analyze the effects of cabin pressure on a thin-walled monocoque circular fuselage section 31
4.2 To study the effect of Pressure change in floor to frame joint: 37

5. CASE STUDY#2 – Thermal loads 41
5.1 To study the effect of temperature, rise in beam attached to spring at end.....41
5.1.1 Perform hand calculations to determine the stress and deformation of a thin-walled monocoque circular fuselage section subjected to pressure. 41
5.1.2 FEA analysis of bar attached to spring at one end 42
Boundary Conditions: 42
5.2 Study the effect of change in floor material in thermally induced load at joint. 44
Case A: Floor beam having same material as fuselage.....44
Resultant Deformation:.....44
Displacement Plot 44
Case B: Floor Beam with the material having thermal Coefficient equal to half of the baseline Material 46
Case C: Floor Beam with the material having thermal Coefficient equal to quarter(1/4th) of the baseline Material 48
Results and Conclusions.....50

6. Future Scope and Improvements:.....51

Acknowledgement:

A two-month internship during our engineering studies is a crucial part of gaining real-world experience and exposure. I am incredibly grateful to the placement team at RV College of Engineering for organizing this opportunity. My time at Boeing has been invaluable, and I sincerely appreciate everyone who contributed to making this experience enriching.

Firstly, I would like to express my gratitude to Mr. Koppa Siddalingappa Arunkumar, Manager at Boeing India, as well as my mentors Asdev Jasraj and Gurrala Lakshmanachari Arunkumar, for their patient guidance, continuous encouragement, and support throughout my projects. I would also like to extend my heartfelt thanks to Dr. Venugopala Rao and Mr. Balasubramanya RajeGowda Jathahalli for their steadfast support and careful planning, which enabled us to engage in sessions aligned with our interests.

Lastly, I want to express my heartfelt thanks to my family for their constant encouragement and support during this journey.

Executive Summary

This comprehensive report presents an analysis of aircraft structural design, with particular emphasis on the critical floor-to-frame joint systems in commercial aviation. The study examines the interplay between pressure and thermal loads acting on these vital structural components within fuselage of wide-body aircraft fleet.

This analysis focuses on the fundamental structural challenges faced by floor-to-frame joints in pressurized aircraft, where cabin pressure differentials of 10-12 psi create substantial outward forces in large commercial aircraft. The combination of these pressure loads with thermal gradients ranging from 160°F at cruise altitude to 70°F in the cabin creates complex stress states that require engineering design solutions.

Key findings demonstrate that floor-to-frame joints serve as critical load transfer mechanisms, distributing passenger, cargo, and equipment loads from horizontal floor structures into the aircraft's primary vertical framework.

The report concludes with recommendations for advanced materials, improved joint designs, and enhanced certification procedures to ensure continued safety and reliability in next-generation aircraft structures.

1 Introduction

1.1 Introduction to Boeing

1.1.1 Company Overview and Global Presence

The Boeing Company represents one of the world's most influential and largest aerospace and defense corporations. Founded in 1916 by William E. Boeing in Seattle, Washington, the company has grown over the past century into a global leader in the design, manufacturing, and support of commercial airplanes, defense systems, and space technologies. Since 2022, Boeing's corporate headquarters has been strategically located in Arlington, Virginia, positioning the company closer to key government and defense stakeholders in the United States.

Boeing's global footprint extends across more than 65 countries, maintaining a comprehensive international presence through its engineering centers, production facilities, suppliers, joint ventures, and technical alliances. The company supports a sophisticated network of more than 10,000 suppliers and partners worldwide, enabling a truly global supply chain that spans continents and cultures. Boeing's commercial aircraft serve more than 150

countries, with the company maintaining customer service centers and regional offices across North America, Europe, Asia-Pacific, the Middle East, and Latin America.

1.1.2 Workforce and Capabilities

With a workforce of over 170,000 employees, Boeing draws from a diverse talent pool that includes engineers, designers, technicians, military veterans, analysts, and cybersecurity experts. This global team is supported by Boeing's substantial investments in research and development (R&D), advanced manufacturing technologies, digital transformation initiatives, and sustainability programs. The company's commitment to innovation is reflected in its consistent ranking among the top aerospace firms globally in terms of revenue and market capitalization.

1.1.3 Financial Performance and Market Position

Boeing's financial performance demonstrates the company's market leadership and operational excellence:

- Annual revenues consistently exceed $70 billion, with a diversified income base from commercial sales, defense contracts, and service offerings
- Regular inclusion in the Fortune 100 and strong presence in the Dow Jones Industrial Average
- Comprehensive customer portfolio including civil airlines, defense ministries, space agencies (including NASA), and logistics and cargo operators
- Financial services through Boeing Capital Corporation (BCC), providing flexible financing and leasing options that enhance the company's ability to close high-value international deals

1.1.4 Strategic Partnerships and Industry Leadership

Beyond manufacturing excellence, Boeing serves as a policy influencer and technical thought leader in the aerospace industry. The company contributes significantly to international aviation safety standards, cybersecurity frameworks, and space exploration collaborations. Boeing maintains strategic partnerships with prestigious organizations including NASA, the U.S. Department of Defense, the European Space Agency (ESA), and various aerospace research institutions worldwide.

Boeing's global scale, advanced product portfolio, strong financial foundation, and unwavering commitment to innovation position the company as a cornerstone of the global aerospace ecosystem, serving civil, military, and space domains with unmatched breadth and capability.

1.2 Boeing's Core Business Segments

Boeing's comprehensive operations are strategically organized around four major business segments, each designed to serve distinct market sectors while maintaining synergy across the organization:

Commercial Airplanes (BCA)

The Commercial Airplanes division represents Boeing's largest and most recognizable segment, responsible for the design, manufacturing, and global sales of commercial jetliners to airlines worldwide. Boeing jets serve as the backbone of global aviation infrastructure, facilitating passenger transport, cargo operations, and freight services across all continents.

Defense, Space & Security (BDS)

The Defense, Space & Security division provides comprehensive military aircraft, autonomous systems, satellites, space exploration systems, and missile defense technologies. This segment serves the U.S. Department of Defense and allied governments around the world, contributing to national security and international stability.

Global Services (BGS)

Launched in 2017, the Global Services division offers comprehensive aftermarket support including maintenance services, training programs, spare parts supply, digital solutions, and logistics support for both commercial and defense sectors. This segment ensures long-term customer satisfaction and aircraft operational efficiency.

Boeing Capital Corporation (BCC)

The Boeing Capital Corporation handles specialized financial services and solutions, helping customers secure funding for aircraft acquisitions and other large-scale projects. This division plays a crucial role in facilitating global aircraft sales and expanding market accessibility.

1.3 Commercial Aircraft Portfolio

1.3.1 Boeing 737 Family

The Boeing 737 stands as the most successful commercial jetliner in aviation history, with more than 10,000 units delivered to operators worldwide. Originally launched in the 1960s for short-range flights, the 737 has evolved into a versatile workhorse serving short- to medium-haul routes for airlines globally.

Evolution and Variants: The 737 family has undergone continuous evolution:

- **737 Classic Series (-300/-400/-500):** Modernized the original design with improved systems and performance
- **Next Generation (NG) Series (-600/-700/-800/-900):** Enhanced range, fuel efficiency, and advanced avionics
- **737 MAX Series (MAX 7/8/9/10):** Latest generation featuring LEAP-1B engines, redesigned winglets, and quieter, more efficient operations

The 737 platform also serves as the foundation for military variants, including the P-8 Poseidon maritime patrol aircraft used by the U.S. Navy and allied forces for anti-submarine warfare and surveillance missions.

1.3.2 Boeing 747 Family

The Boeing 747, introduced in 1970, revolutionized aviation as the world's first wide-body aircraft, earning the nickname "Queen of the Skies." The aircraft's distinctive hump-backed upper deck created an instantly recognizable silhouette while enabling unique seating configurations and premium passenger amenities.

Design Evolution: The 747-family progression includes:

- **Early Models (747-100/-200/-300):** Established the wide-body standard
- **747-400:** Featured more powerful engines, glass cockpit, and extended range
- **747-8:** Final variant with improved efficiency and modern avionics, available in both Intercontinental (passenger) and Freighter configurations

The 747-8 Freighter continues to serve as one of the world's most capable heavy-lift cargo aircraft, with nose-loading capabilities essential for oversized freight and specialized transport missions.

1.3.3 Boeing 767 Family

The Boeing 767 twin-engine wide-body aircraft, introduced in the early 1980s, was originally developed for mid- to long-range passenger routes. While newer aircraft have assumed many passenger duties, the 767 remains highly valued for freight operations and military applications.

Current Applications: The 767 continues production in specialized variants

- **767 Freighter (767F):** Popular among cargo carriers for medium- to long-haul missions
- **KC-46 Pegasus:** Aerial refueling tanker for the U.S. Air Force, combining cargo flexibility with advanced military refueling systems

1.3.4 Boeing 777 Family

The Boeing 777 long-range wide-body aircraft, launched in the 1990s, quickly became favored by airlines for its optimal balance of passenger capacity, fuel efficiency, and extended range capability.

Variants and Future Development: The 777 family includes,

- **Current Models:** 777-200, 777-200ER, 777-300, 777-300ER, and 777 Freighter
- **Next Generation (777X):** 777-8 and 777-9 variants featuring folding wingtips, composite wings, and GE9X engines for improved efficiency

The 777 Freighter serves as one of the most widely used long-range cargo aircraft, capable of carrying up to 102 metric tons over distances exceeding 9,000 km.

1.3.5 Boeing 787 Dreamliner Family

The 787 Dreamliner represents Boeing's most advanced wide-body commercial aircraft, developed with emphasis on fuel efficiency, passenger comfort, and next-generation technology. The aircraft features a composite fuselage construction, making it significantly lighter and more efficient than traditional aluminum aircraft.

Technical Innovation: The 787 family incorporates,

- **Advanced Materials:** Composite fuselage construction
- **Enhanced Passenger Experience:** Lower altitude pressurization and improved humidity control

- **Operational Flexibility:** Enables direct routes between secondary cities
- **Three Variants:** 787-8 (long-range, low-density), 787-9 (additional capacity and range), 787-10 (high-density medium/long-haul)

1.4 Certification and Regulatory Compliance

Federal Aviation Regulations

The design and certification of aircraft structures, including floor-to-frame joints, are governed by strict regulatory requirements ensuring safety and airworthiness throughout the aircraft's operational life.

FAR Part 25 Requirements: Key regulatory sections include,

- **25.365 - Pressurized Compartments:** Requires fuselage structures to withstand internal pressure differentials
- **25.571 - Damage Tolerance:** Specifies structural capability to sustain loads despite damage
- **25.613 - Material Properties:** Governs mechanical and thermal properties for structural calculations
- **25.841 - Pressurization Requirements:** Addresses pressurization and venting system design

International Harmonization: Global aircraft certification requires compliance with

- **EASA CS-25:** European equivalent to FAR Part 25
- **ASTM Standards:** Material properties and testing procedures
- **SAE Standards:** Aerospace engineering standards
- **ASME Codes:** Pressure vessel design principles

Certification Process

Analysis and Testing Requirements Certification requires comprehensive validation:

- **Finite Element Analysis:** Detailed structural analysis under various loading conditions
- **Physical Testing:** Full-scale testing of critical structural components

- **Fatigue Testing:** Validation of fatigue life predictions
- **Damage Tolerance Testing:** Demonstration of residual strength with damage

Documentation and Approval: The certification process involves:

- **Type Certification (TC):** Initial aircraft design approval
- **Supplemental Type Certificate (STC):** Approval for design modifications
- **Design Organization Approval (DOA):** Ongoing design change authority
- **Continued Airworthiness:** Long-term structural monitoring and maintenance

2 Aircraft Structural Fundamentals: Impact of Thermal and Pressure Loads on Floor-to-Frame Joints

2.1 Primary Structural Components

Aircraft structures are engineered to withstand various loads while maintaining minimal weight, representing a fundamental challenge in aerospace engineering. Each structural component serves specific functions while meeting stringent safety and performance requirements.

2.1.1 Wings

Wings represent the primary lift-generating surfaces and must accommodate multiple load types simultaneously:

- **Lift Loads:** Create upward bending forces exceeding aircraft weight during maneuvering
- **Weight Loads:** Downward forces from fuel, engines, and landing gear
- **Torsional Loads:** Result from aerodynamic forces and control surface deflections
- **Shear Loads:** Occur from differential lift distribution and concentrated loads

Wing construction typically employs semi-monocoque design where the outer skin carries structural loads alongside internal frameworks including spars, ribs, and stringers.

2.1.2 Fuselage

The fuselage is a critical component of an aircraft, serving as the main body that houses the cockpit, passengers, cargo, and various systems. Its structural detailing involves several key aspects that ensure the aircraft's integrity, performance, and safety.

Materials

Materials used in fuselage construction typically include aluminum alloys, which are favored for their strength-to-weight ratio and corrosion resistance. In recent years, composite materials have gained popularity due to their lightweight properties and ability to be molded into complex shapes. Additionally, titanium is often utilized in high-stress areas because of its exceptional strength and resistance to fatigue. The choice of materials is crucial, as they directly impact on the overall weight and performance of the aircraft.

Structure

The structure of the fuselage consists of several components, including frames, stringers, and skin. Frames are circular or oval cross-section structures that provide shape and support, spaced at regular intervals along the fuselage's length. Stringers are longitudinal members that run parallel to the fuselage, adding strength and stiffness. The skin, typically made from sheets of aluminum or composite materials, serves as the outer covering and is attached to the frames and stringers. This combination of elements ensures that the fuselage can withstand various loads and stresses encountered during flight.

Load Distribution

Load distribution is a critical consideration in fuselage design. The structure must handle tensile loads from pressurization and aerodynamic forces, shear loads from aerodynamic forces acting on the fuselage, and bending moments resulting from the aircraft's weight and dynamic forces during flight. Additionally, the fuselage is designed to withstand internal pressure, particularly in commercial aircraft. This involves creating sealed compartments to maintain cabin pressure and reinforcing structures in areas where pressure differentials are greatest.

Access and Maintenance

Access and maintenance are also important aspects of fuselage design. Access panels are incorporated to allow easy access to internal systems and components, while inspection ports are provided for regular maintenance checks to ensure structural integrity. These features facilitate the upkeep of the aircraft and contribute to their overall safety and reliability.

Aerodynamics

Aerodynamics plays a significant role in fuselage design, as the shape must minimize drag and optimize airflow. This is crucial for fuel efficiency and overall aircraft performance.

Safety Features

Safety features such as crashworthiness and fire resistance are integral to the fuselage's design. Considerations are made to protect occupants in the event of a crash, and materials and coatings are selected to withstand high temperatures.

Integration with Other Systems

Finally, the fuselage must accommodate various systems, including avionics for navigation and communication, environmental control systems for cabin pressure and temperature regulation, and fuel systems integrated into the structure. The successful integration of these systems is essential for the aircraft's functionality and performance.

As the fuselage forms the aircraft's central body, handling multiple load types:

- **Bending Loads:** Primary load path from wing lift and tail forces
- **Torsional Loads:** From asymmetric loading and control surface deflections
- **Pressurization Loads:** Create hoop stress and longitudinal stress in pressurized aircraft
- **Concentrated Loads:** At wing attachments, landing gear mounts, and engine mounts

2.1.2.1 Structural Benefits of Floor Beams

Floor beams are integral components of an aircraft's structural framework, providing essential support for the cabin floor while contributing to the overall integrity of the fuselage. One of the primary structural benefits of floor beams is their ability to distribute loads evenly across the aircraft structure. By transferring the weight of passengers, cargo, and equipment to the fuselage, floor beams help prevent localized stress concentrations that could lead to structural failure. This load distribution is crucial for maintaining the aircraft's structural integrity during various flight conditions, including takeoff, cruising, and landing.

In addition to load distribution, floor beams enhance the stiffness and stability of the cabin floor. Their design is optimized to resist bending and deformation, ensuring that the floor remains level and secure under varying loads. This stability is vital for passenger comfort and safety, as it minimizes vibrations and movement within the cabin. The integration of floor beams with other structural elements, such as frames and stringers, creates a cohesive and robust framework that enhances the overall strength of the fuselage. This

interconnectedness allows the aircraft to withstand dynamic loads experienced during flight, such as turbulence and rapid maneuvers.

Another significant function of floor beams is their role in maintaining the aerodynamic shape of the aircraft. By providing structural support to the cabin floor, floor beams help preserve the fuselage's streamlined profile, which is essential for reducing drag and improving fuel efficiency. The design of floor beams is carefully considered to ensure that they do not disrupt the airflow around the aircraft, contributing to its overall aerodynamic performance. This is particularly important in modern aircraft, where fuel efficiency is a critical factor in operational costs and environmental impact.

Finally, floor beams contribute to the safety and reliability of the aircraft through their fail-safe design. By incorporating multiple load paths, floor beams ensure that if one structural element fails, alternate paths can carry the loads, preventing catastrophic failure. This redundancy is essential for maintaining structural integrity during extreme conditions or unexpected events. Regular maintenance and inspection of floor beams further enhance their reliability, ensuring that they continue to perform effectively throughout the aircraft's operational life. Overall, the structural benefits and functions of floor beams are vital for the safety, performance, and efficiency of modern aircraft.

2.1.3 Empennage

The empennage provides stability and control authority through:

- **Horizontal Stabilizer:** Experiences downward loads for aircraft balance
- **Vertical Stabilizer:** Handles side loads from crosswinds and engine failures
- **Control Surfaces:** Create torsional moments requiring robust structural design

2.2 Fuselage Design Philosophy

2.2.1 Semi-Monocoque Construction

Modern fuselage design predominantly employs the semi-monocoque construction method, which represents a significant advancement over traditional construction techniques. This design philosophy integrates both the outer skin and the internal framework to share structural loads, resulting in a more efficient and robust aircraft structure.

Understanding the Semi-Monocoque Structure

The semi-monocoque design consists of a thin outer skin that is reinforced by an internal framework of frames and stringers. This configuration allows the fuselage to distribute loads more evenly across its surface, enhancing its ability to withstand various forces encountered during flight, such as pressurization, aerodynamic loads, and impact forces.

- **Outer Skin**: The skin acts as a primary load-bearing element, providing the necessary stiffness and strength to resist bending and buckling. It also contributes to the aerodynamic shape of the aircraft.

- **Internal Framework**: The frames (transverse members) and stringers (longitudinal members) provide additional support and help maintain the fuselage's shape. They are strategically placed to optimize load distribution and minimize weight.

Advantages of Semi-Monocoque Design

The semi-monocoque construction method offers several advantages over earlier construction methods, such as the truss or monocoque designs:

- **Strength-to-Weight Ratio**: The semi-monocoque design achieves a superior strength-to-weight ratio, allowing for lighter structures without compromising safety. This is particularly important in aviation, where weight reduction directly translates to improved fuel efficiency and performance.

- **Improved Aerodynamics**: The streamlined shape of the semi-monocoque fuselage reduces drag, enhancing the aircraft's aerodynamic efficiency. This is crucial for achieving higher speeds and better fuel economy.

- **Enhanced Structural Integrity**: By distributing loads across both the skin and the internal framework, the semi-monocoque design improves the overall structural integrity of the fuselage. This reduces the likelihood of localized failures and enhances the aircraft's durability.

- **Easier Maintenance and Repair**: The modular nature of the semi-monocoque design allows for easier access to internal components, facilitating maintenance and repair. Damaged sections can often be replaced without needing to overhaul the entire structure.

Material Innovations

The semi-monocoque design has been further enhanced by advancements in materials technology. The use of high-strength aluminum alloys, composites, and advanced materials like carbon fiber reinforced polymers (CFRP) has revolutionized fuselage construction.

- **Aluminum Alloys**: Lightweight and strong, aluminum alloys remain a staple in fuselage design. They provide excellent corrosion resistance and can be easily formed into complex shapes.

- **Composite Materials**: The introduction of composite materials has allowed for even greater weight savings and design flexibility. Composites can be molded into intricate shapes, enabling optimized aerodynamic profiles and reducing the number of joints and fasteners required.

- **Hybrid Structures**: Modern aircraft often utilize hybrid structures that combine metals and composites, leveraging the strengths of each material to achieve optimal performance

2.2.2 Load Path Management

Load path management is a critical aspect of aircraft structural design, ensuring that loads are effectively transmitted through the aircraft structure without causing failure. In modern aircraft, the primary load path is designed to handle significant forces, particularly those generated during flight maneuvers, turbulence, and landing.

Primary Load Path

The primary load path in an aircraft typically runs from the wing attachment points through the center wing box and into the opposite wing. This configuration is essential for several reasons:

- **Bending Moments**: The wings generate a lift, which creates bending moments that must be managed effectively. The primary load path is designed to handle these moments, ensuring that the structure can withstand the forces exerted during flight. The bending moments are particularly significant during maneuvers such as turns, climbs, and descents.

- **Fuselage as a Central Beam**: The fuselage acts as a central beam in this load path, distributing loads from the wings to the tail and landing gear. The fuselage must be designed to resist bending and shear forces while maintaining its structural integrity. This requires careful consideration of the fuselage's geometry, material properties, and reinforcement locations.

- **Load Distribution**: Effective load path management ensures that loads are distributed evenly throughout the structure. This minimizes stress concentration and reduces the risk of localized failures. Engineers use advanced modeling techniques, such as finite element analysis (FEA), to simulate load distribution and optimize the design.

- **Integration with Other Structures**: The primary load path must be integrated with other structural elements, such as the tail and landing gear. This requires careful coordination to ensure that all components work together to manage loads effectively.

Secondary Load Paths

In addition to the primary load path, secondary load paths are also established to provide redundancy and enhance structural integrity. These paths can help distribute loads in the event of localized failures or unexpected loading conditions.

- **Redundancy**: Secondary load paths provide alternative routes for load transfer, ensuring that the aircraft can continue to operate safely even if one structural element fails. This redundancy is particularly important in critical areas, such as wing attachments and fuselage joints.

- **Design Considerations**: Engineers must carefully consider the placement and sizing of secondary load paths to ensure they can effectively carry loads without compromising the overall weight and performance of the aircraft.

2.2.3 Fail-Safe Design

Boeing's structural design philosophy emphasizes fail-safe construction, which is crucial for ensuring the safety and reliability of aircraft. This approach involves designing structures with multiple load paths for critical loads, allowing the aircraft to maintain structural integrity even in the event of a failure.

Key Principles of Fail-Safe Design

1. **Multiple Load Paths**: The primary principle of fail-safe design is the incorporation of multiple load paths for critical loads. This means that if one structural element fails, alternate paths can carry the loads until repairs are completed. This redundancy is essential for maintaining safety and preventing catastrophic failures.

2. **Critical Load Identification**: Engineers must identify critical loads that could lead to structural failure if not properly managed. These loads may include those generated during flight maneuvers, landing, and extreme weather conditions. By understanding these loads, engineers can design structures that can withstand potential failures.

3. **Progressive Failure Management**: Fail-safe design aims to ensure that failures occur progressively rather than catastrophically. This means that if one component fails, the load is redistributed to other components, allowing the aircraft to remain operational and safe until repairs can be made. This approach minimizes the risk of sudden structural collapse.

4. **Material Selection and Testing**: The materials used in fail-safe designs must possess high strength and fatigue resistance. Engineers conduct extensive testing to ensure that materials can withstand the expected loads and potential failure scenarios. This includes static and dynamic load testing, as well as fatigue testing to assess long-term performance.

5. **Maintenance and Inspection Protocols**: Regular maintenance and inspection protocols are essential for identifying potential issues before they lead to failures. Engineers design inspection access points into the structure to facilitate routine checks and ensure that any signs of wear or damage are addressed promptly.

6. **Regulatory Compliance**: Fail-safe design principles must comply with aviation regulations and safety standards set by authorities such as the FAA and EASA. These regulations often dictate specific requirements for redundancy, load paths, and structural integrity.

2.3 Pressure Loads

Cabin Pressurization Loads

Cabin pressurization is a critical aspect of aircraft design, particularly for commercial and high-altitude flights. The cabin must be maintained at a pressure that ensures passenger comfort and safety, as the external atmospheric pressure decreases significantly with altitude. Understanding the loads associated with cabin pressurization is essential for ensuring the structural integrity of the fuselage.

Types of Pressurization Loads

1. **Internal Pressure Load**: This is the load exerted on the fuselage structure due to the difference between the internal cabin pressure and the external atmospheric pressure. As the aircraft ascends, the external pressure decreases, creating a pressure differential that the fuselage must withstand.

2. **Dynamic Loads**: These loads occur during changes in altitude, such as during ascent and descent. Rapid changes in cabin pressure can lead to dynamic loading conditions that the structure must accommodate.

3. **Fatigue Loads**: Repeated pressurization cycles during takeoff, cruising, and landing can lead to fatigue in the fuselage materials. The design must account for these cyclical loads to prevent structural failure over time.

Calculating Pressurization Loads

The calculation of cabin pressurization loads involves several steps and considerations:

1. **Determine the Pressure Differential**:
   - The pressure differential can be calculated using the formula:

     $$\Delta P = P_{(cabin)} - P_{(ambient)}$$

     where:

     - $P_{(cabin)}$ is the internal cabin pressure.
     - $P_{(ambient)}$ is the external atmospheric pressure, which decreases with altitude.

2. **Calculate the Area of the Fuselage**:
   - The effective area (A) of the fuselage that is subjected to the pressure differential can be calculated based on the fuselage geometry. For a cylindrical fuselage, the area can be approximated as:

$$A = \pi DL$$

where:

- D is the diameter of the fuselage.
- L is the length of the fuselage section being considered.

3. **Calculate the Total Pressurization Load**:
   - The total pressurization load [F_(press)] acting on the fuselage can be calculated using the formula:

$$F(press) = \Delta P \times A$$

   - This load must be distributed across the fuselage structure, including frames, stringers, and skin.
4. **Consider Structural Factors**:
   - The fuselage must be designed to handle not only the static loads from pressurization but also dynamic loads during flight operations. Factors such as material properties, geometry, and safety margins must be considered in the design.
5. **Fatigue Analysis**:
   - A fatigue analysis should be conducted to assess the impact of repeated pressurization cycles on the fuselage structure. This involves using S-N curves (stress vs. number of cycles) for the materials used in the fuselage to predict the lifespan and identify potential failure points.

Pressure Differential Effects:

The pressure differential generates:

I. **Hoop Stress:** Circumferential tension in the fuselage skin

II. **Axial Stress:** Longitudinal stress along the aircraft axis

III. **Radial Displacement:** Outward expansion of the fuselage structure

IV. **Cyclic Loading:** Repeated pressurization and depressurization cycles

Structural Response

Large commercial aircraft may experience over 500,000 pounds of total force attempting to expand the cabin. This enormous load requires:

i. Robust frame design to maintain cross-sectional shape

ii. Pressure bulkheads to contain cabin pressure

iii. Reinforced door and window installations

iv. Carefully designed floor-to-frame joints

2.4 Thermal Loads

Thermal loads are an important consideration in aircraft design, as they arise from temperature variations experienced during flight operations. These variations can occur due to changes in altitude, exposure to sunlight, and the operation of onboard systems. As an aircraft ascend to higher altitudes, the external temperature decreases significantly, while the internal environment may be maintained at a comfortable temperature for passengers and crew. This temperature differential creates thermal stress within the aircraft structure, particularly in components such as floor beams, which are critical for maintaining the integrity of the fuselage and supporting the cabin.

Loading Conditions Experienced in Aircraft

Aircraft experience a variety of loading conditions throughout their operational life, including static loads, dynamic loads, and thermal loads. Static loads are those that act on the structure when the aircraft is at rest or in a steady state, such as the weight of the aircraft itself and the forces exerted by passengers and cargo. Dynamic loads, on the other hand, occur during flight maneuvers, turbulence, and landing, resulting in fluctuating forces that can significantly impact the structural integrity of the aircraft.

Thermal loads are particularly relevant during flight operations, as the aircraft undergo rapid changes in temperature. For example, during ascent, the external temperature can drop dramatically, while the internal cabin temperature remains relatively stable. This creates a thermal gradient across the aircraft structure, leading to expansion and contraction of materials. The floor beams, which are integral to the fuselage structure, must accommodate these thermal changes without compromising their load-bearing capacity.

Effects of Thermal Loads on Floor Beams

The floor beams in an aircraft are designed to support the weight of the cabin floor and any loads imposed by passengers, cargo, and equipment. However, they are also subjects

to thermal loads that can affect their performance. The thermal coefficient of expansion (CTE) of the materials used in the floor beams plays a crucial role in determining how these beams respond to temperature changes.

Thermal Expansion and Contraction:

As temperatures rise, materials expand, and as temperatures fall, they contract. The CTE quantifies this behavior, indicating how much a material will expand or contract per degree of temperature change. For example, aluminum, commonly used in aircraft structures, has a CTE of approximately 23 x 10^-6 /°C, while composite materials may have varying coefficients depending on their composition. If the floor beams are made from materials with different CTEs, differential expansion can occur, leading to internal stress and potential deformation.

Stress Concentrations:

When thermal loads cause differential expansion between the floor beams and adjacent structures, stress concentrations can develop at the interfaces. These stress concentrations can lead to fatigue over time, particularly in areas where the material is already subject to cyclic loading from passenger movement and operational forces. Engineers must carefully analyze these interactions to ensure that the floor beams can withstand both thermal and mechanical loads without failure.

Material Selection:

The choice of materials for floor beams is critical in managing thermal loads. Materials with lower CTEs may be preferred to minimize differential expansion and reduce the risk of stress concentrations. Additionally, the thermal conductivity of the materials can influence how quickly they respond to temperature changes. For instance, materials with high thermal conductivity may distribute heat more evenly, reducing localized thermal stresses.

Design Considerations:

Engineers must incorporate thermal load considerations into the design of floor beams. This may involve using expansion joints or flexible connections to accommodate movement without inducing excessive stress. Additionally, the design must account for the worst-case thermal loading scenarios, such as rapid ascent or descent, to ensure that the floor beams can maintain their structural integrity under all operating conditions.

Temperature Gradients:

Aircraft structures experience extreme temperature variations:

- **External Temperature:** As low as -67°F at cruise altitude
- **Internal Temperature:** Maintained at 68-75°F for passenger comfort
- **Solar Heating:** Uneven heating from solar radiation
- **System Heat Generation:** From avionics, engines, and operational system

Thermal Stress Development: Temperature gradients create thermal stresses through:

- **Differential Expansion:** Different materials expand at different rates
- **Restrained Deformation:** Structural constraints prevent free expansion
- **Thermal Cycling:** Repeated heating and cooling cycles
- **Material Compatibility:** Challenges at dissimilar material interfaces

2.5 Combined Load Effects

The simultaneous action of pressure and thermal loads at the floor-to-frame joint creates a complex loading environment that must be carefully analyzed during the design process.

- **Interaction of Loads**: When the cabin is pressurized, the floor experiences upward force due to the pressure differential. Simultaneously, if the temperature increases, the floor will expand. The combination of these effects can lead to increased compressive stress in the floor and tensile stresses in the frame. Conversely, during cooling, the floor may contract while still experiencing pressure loads, leading to different stress distributions.
- **Stress Concentrations**: The interaction of thermal and pressure loads can create stress concentrations at the joint. If the thermal expansion of the floor exceeds the capacity of the frame to accommodate this movement, it can lead to localized failures or fatigue in the materials. Engineers must ensure that the joint design allows for sufficient movement and flexibility to accommodate these stresses.
- **Design Considerations**: To mitigate the effects of simultaneous pressure and thermal loads, engineers may incorporate features such as flexible connections, expansion joints, or additional reinforcements at the floor-to-frame joint. These design elements help accommodate differential movements and reduce the risk of stress concentrations.

2.6 Floor-to-Frame Joint Analysis

2.6.1 Joint Function and Criticality

Floor-to-frame joints serve as critical structural connections, providing the primary interface between horizontal load-bearing surfaces (floors) and vertical structural elements (frames). These joints are fundamental to aircraft structural integrity, responsible for transferring various loads while maintaining geometric stability.

Primary Load Transfer Functions Floor-to-frame joints perform several critical functions:

- **Vertical Load Transfer:** Distribute passenger, cargo, and equipment loads from cabin floors into fuselage frames.
- **Horizontal Load Transfer:** Handle acceleration, deceleration, and lateral forces during flight and ground operations.
- **Moment Resistance:** Resist moments from eccentric loading and equipment installations.
- **Structural Continuity:** Maintain load path integrity under various operating conditions.

2.6.2 Load magnitudes and Characteristics

Typical load conditions include:

- **Static Loads:** 100-150 pounds per square foot in passenger areas
- **Dynamic Loads:** Load factors of 2.5-6.0 times the static loads during maneuvering
- **Fatigue Loads:** Repeated stress cycles from operational conditions
- **Emergency Loads:** Extreme conditions during evacuation or emergency scenarios

2.6.3 Material Selection and Compatibility

Traditional Materials:

Aluminum alloys remain prevalent in floor-to-frame joints:

- **2024-T3 Aluminum:** Excellent strength-to-weight ratio and fatigue resistance
- **7075-T6 Aluminum:** High strength for critical applications

- **Steel Fasteners:** Superior bearing strength and fatigue resistance
- **Corrosion Prevention:** Careful design to prevent galvanic corrosion

Advanced Materials: Modern aircraft increasingly incorporated advanced materials:

- **Carbon Fiber Composites:** Excellent strength-to-weight ratios with specialized joining techniques
- **Titanium Alloys:** Exceptional strength and corrosion resistance for critical ap- plications
- **Hybrid Assemblies:** Combinations of materials optimized for specific requirements
- **Thermal Compatibility:** Careful consideration of coefficient of thermal expansion difference

2.6.4 Joint Design Methodologies

Analysis Approaches - Comprehensive analysis methodologies include:

- **Static Analysis:** Determination of maximum loads under operational conditions
- **Dynamic Analysis:** Finite element methods for complex loading scenarios
- **Fatigue Analysis:** Prediction of fatigue life under cyclic loading
- **Damage Tolerance:** Assessment of joint performance with reasonable damage levels.

2.6.5 Design Optimization

Joint optimization considers:

- **Load Distribution:** Efficient transfer of loads between structural elements
- **Stress Concentration:** Minimization of stress concentration factors
- **Manufacturing Constraints:** Consideration of production and assembly requirements
- **Maintenance Access:** Provision for inspection and maintenance activities

2.6.6 Industry Impact

The continued advancement of floor-to-frame joint technology will contribute to:

- **Enhanced Safety:** Improved structural reliability and damage tolerance
- **Operational Efficiency:** Reduced maintenance requirements and extended service life
- **Environmental Benefits:** Weight reduction and improved fuel efficiency
- **Economic Advantages:** Lower life-cycle costs and improved aircraft availability.

3 Overview of the problem Statement

3.1 Objectives:

3.1.1 Case Study#1:

The study focuses on analyzing the effects of a change in cabin pressure within the fuselage of a commercial aircraft, specifically examining the transition from a cabin pressure of 11.8 psi, which corresponds to an altitude of approximately 6,000 feet, to a cabin pressure of 10.92 psi, corresponding to an altitude of about 8,000 feet. This change in pressure is significant for several reasons, particularly concerning the structural integrity of the floor-to-frame joints and the overall fuselage.

This study can be categorized into two steps:

A) To study the effect of pressure on thin-walled circular fuselage.

i. Perform hand calculations to determine the stress and deformation of a thin-walled monocoque circular fuselage section subjected to pressure.

ii. Analyze the effects of cabin pressure on a thin-walled monocoque circular fuselage section using Finite Element Analysis (FEA) and validate the results through hand calculations

B) To study the effect of change in pressure in semi-monocoque fuselage.

i. Conduct an FEA to assess the impact of cabin pressure on a thin-walled semi-monocoque circular fuselage section.

ii. Calculate Joint loads and deformation using FEA.

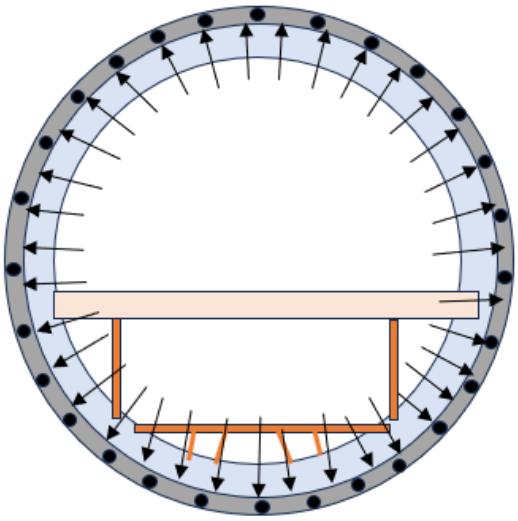

Cabin pressure changes from pressure equivalent to 8000 ft altitude to pressure equivalent to 6000 ft altitude

3.1.2 Case Study#2:

To study and calculate the thermally induced loads in floor to frame joint for the design where floor grid is having material different than fuselage material (i.e. both floor and frame have different thermal expansion coefficient).

This study can be categorized into two steps:

A. To Study the effect of temperature, rise in Beam attached to spring at end
   i. Perform hand calculations to study the effect of bar attached to spring at one end and subjected to temperature rise.
   ii. Analyze the effect of thermal expansion of bar attached to spring at one end using FEA and provide validation of hand calculation.

B. Study the Effect of Change in Floor Beam material at elevated temperature
   i. Perform FEA to evaluate the effects of thermal loads on a thin-walled semi-monocoque circular fuselage section with various floor beam materials that have different coefficients of thermal expansion.
   ii. Calculate Joint loads and deformation using FEA.

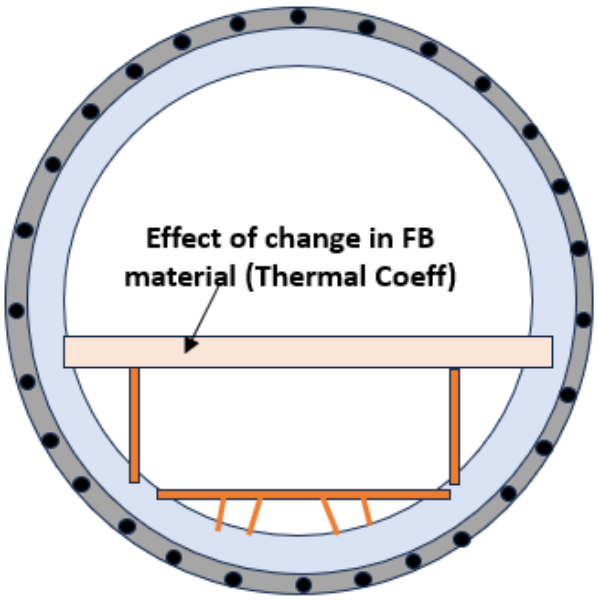

Floor grid material changes Effect at elevated temperature of 160F
Room Temp = 70F

3.2 Assumptions:

1. Fuselage is assumed to be of perfect circular section for the study.
2. Skin thickness is assumed to be uniform in entire fuselage for the study.
3. Linear static analysis is performed without considering any inertia effects.
4. Local joint details are not considered in the analysis – the joints are idealized by node-to node connection in FEA.
5. Pressure is applied uniformly in the entire section.
6. Simplified boundary conditions are considered for the study without capturing stiffness of wing or adjacent attaching structure.
7. Isotropic material properties are considered in the analysis.
8. Mesh convergence study is not performed for this study as the objective of this study is internal load distribution calculation (and not exactly in stress calculation for sizing).
9. To nullify the effect of boundary condition in results, fuselage of sufficient length is considered. One needs to do separate study to understand effect of boundary condition on this loads.

4. CASE STUDY#1 – Pressure loads

4.1 To study the effect of pressure on thin-walled circular fuselage.

4.1.1 Perform hand calculations to determine the stress and deformation of a thin-walled monocoque circular fuselage section subjected to pressure.

Given,

$P_{8000ft} = 10.92$ psi

$P_{43000ft} = 2.140$ psi

Radius = 113 inch

Thickness = 0.07 inch

Soln

$\Delta P = P_{8000ft} - P_{43000ft}$

$= 8.78$ psi.

Due to tolerance of pressure relief valve,

* ΔP at operating load $= 8.78 + 0.5$
$= 9.28$ psi

* ΔP at limit load $= \Delta P$(operating load) $\times 1.33$
$= 9.28 \times 1.33$
$= 12.3424$ psi

ΔP at ultimate load $= \Delta P$(at limit load) $\times 1.5$
$= (9.28 \times 1.33)\ 1.5$
$= 18.5136$ psi

A] Hoop stress Calculations

i] At Limit Load

$$\boxed{\sigma_H = \frac{\Delta p r}{t}}$$

$$\sigma_H = \frac{12.3424 \times 113}{0.07}$$

$$= 19.92 \times 10^3 \text{ psi}$$

ii] At Ultimate Load

$$\sigma_H = \frac{18.5136 \times 113}{0.07}$$

$$= 29.88 \times 10^3 \text{ psi}$$

B] Longitudinal stress calculations

$$\boxed{\sigma_L = \frac{\Delta p r}{2t}}$$

i] $$\sigma_L = \frac{12.3424 \times 113}{2 \times 0.07}$$

$$= 9.9 \times 10^3 \text{ psi}$$

ii] At Ultimate Load

$$\sigma_L = \frac{18.5136 \times 113}{2 \times 0.07}$$

$$= 14.94 \times 10^3 \text{ psi}$$

For iteration - 1

Since tangential expansion is constrained, there will be no longitudinal stress.

$$\frac{\Delta d}{d} = \frac{\sigma_H}{E} - \mu \cancel{\frac{\sigma_L}{E}}^{\,0}$$

$$\Delta d = \left(\frac{\sigma_H}{E}\right) d$$

$$= \frac{19.92}{10.6 \times 10^3} \times 113$$

$$\boxed{\Delta d = 0.22 \text{ in}} \rightarrow \text{Radial displacement}$$

Results obtained:

1. At limit load,
   Hoop stress = 19.92e3 psi
   Longitudinal Stress = 9.90e3 psi

2. At ultimate Load,
   Hoop stress =29.88e3 psi
   Longitudinal Stress = 14.94e3 psi

3. Radial Displacement = 0.22 in

4.1.2 Finite Element Analysis (FEA) to analyze the effects of cabin pressure on a thin-walled monocoque circular fuselage section

ITERATION 1: OPEN CYLINDER CASE

The open cylinder case in FEA involves modeling a cylindrical structure that is open at one or both ends to assess its behavior under various loading conditions, such as internal pressure, external loads, and thermal effects. The process begins with creating a geometric model of the cylinder, defining material properties, and applying appropriate boundary conditions. Loads, including internal pressure that induces hoop and axial stresses, external forces, and thermal loads, are then applied to the model. The cylinder is discretized into smaller elements through meshing, allowing for detailed analysis of stress distribution and deformation. After running the analysis, results are visualized through contour plots to identify critical stress areas and validate the design against hand calculations.

Input Conditions:

1. <u>Dimensions of cylinder</u>
   a. Radius = 113 in
   b. Length = 120 in (24 in*5 frames) (Houghton)

2. <u>Loads/ Boundary conditions</u>
   A local cylindrical coordinate system is created to apply boundary conditions.
   a. Both ends of fuselage are constrained in tangential direction
   b. One end of fuselage is constrained in axial direction to simulate open cylinder case.
   c. Pressure is applied at inner surface = 12.3454 psi

3. <u>Material properties</u>
   a. Aluminum
   b. Young's Modulus = 10.3E06 psi
   c. Poisson's ratio = 0.33

4. <u>FE details</u>
   a. Nodes/Stringer locations = 80 along the circumference
   b. Shell element (4 noded element) is used for analysis.

5. <u>Type of Analysis</u>: Static

Results & Conclusions:

A. Deformation plot:

The plot showcases **uniformly deformed cylinder**. When an open cylindrical fuselage is subjected to internal pressure, the pressure acts uniformly on the inner surface, causing the cylinder to expand. In an ideal scenario, if the material properties are consistent and the loading conditions are uniform, the resulting deformation can be expected to be uniform as well. This means that every point along the cylinder experiences similar amounts of displacement, leading to the below showcased structural response.

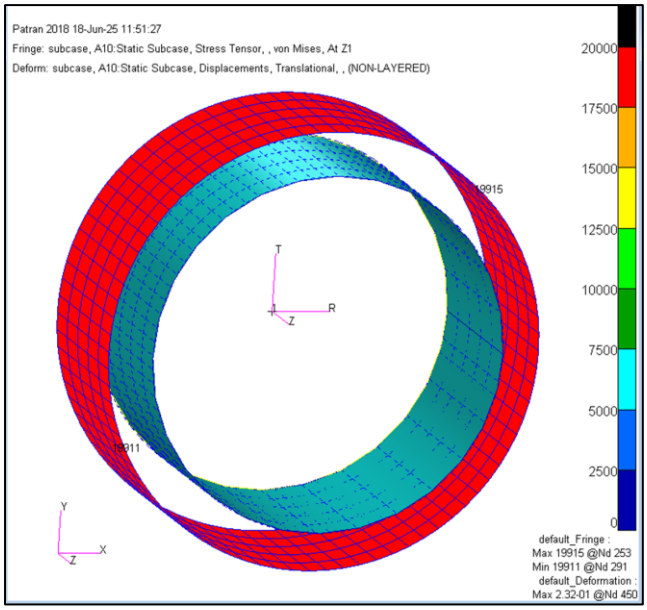

Scale Factor=100

B. Resulting Stress values

Maximum stress was obtained at node 253 with value of **19.9 psi**.

C. Validation of Hand calculation:

	Hoop Stress	Radial Displacement
	(Ksi)	(in)
FEA result	19.91	0.23
Hand Calc result	19.92	0.22

The FEA results match the results of hand calculation. Hence, validated.

ITERATION 2: CLOSE CYLINDER CASE

To simulate the effect of close fuselage, equivalent pressure load is calculated and applied at one of the free ends of fuselage.

Pressure load calculation:

Axial force = Pressure*Area

= 12.34*$\pi * (113)^2$

= 1.238E5 lb

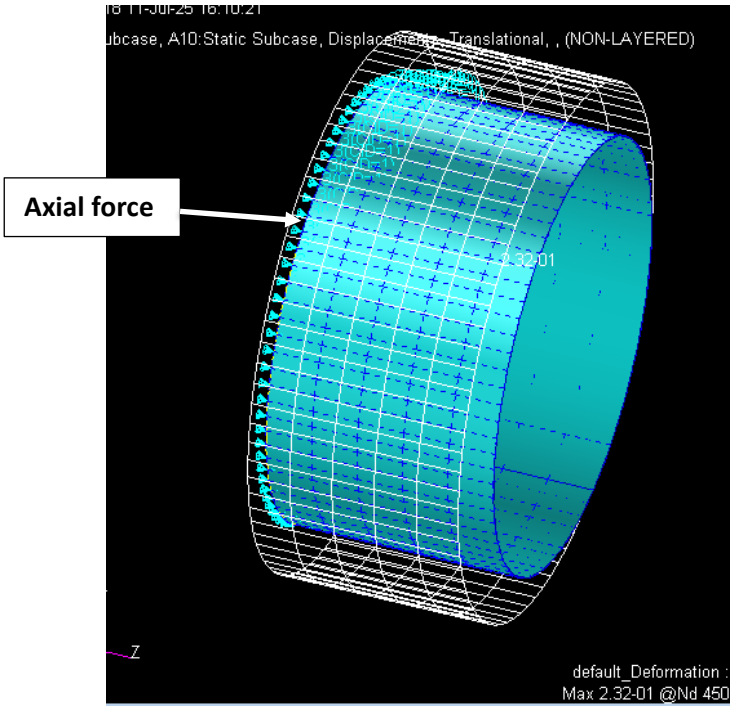

Input Conditions:

1. <u>Dimensions of cylinder</u>
   a. Radius = 113 in
   b. Length = 120 in (24 in*5 frames)

2. <u>Loads/ Boundary conditions</u>
   Local cylindrical coordinate system is created to apply boundary conditions.
   a. Both ends of fuselage are constrained in tangential direction
   b. One end of fuselage is constrained in axial direction to simulate open cylinder case.
   c. Pressure is applied at inner surface = 12.3454 psi
   d. Axial force is applied at one end of the fuselage = 1.238E5 lb

3. Material properties
   a. Aluminum
   b. Young's Modulus = 10.3E06 psi
   c. Poisson's ratio = 0.33

4. FE details
   a. Nodes/Stringer locations = 80 along the circumference
   b. Shell element (4 noded element) is used for analysis.

5. Type of Analysis: Static

Results and Conclusions:

Deformation Plot:

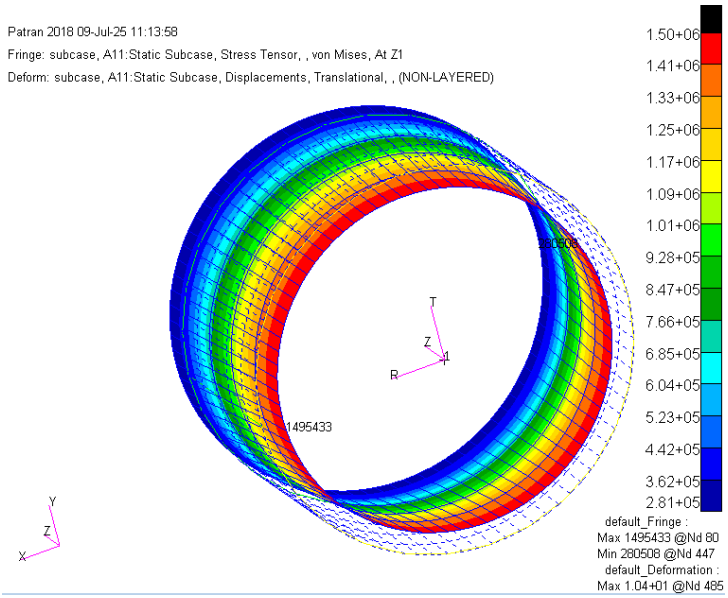

Scale Factor=100

Resulting longitudinal stress:

Maximum stress was obtained at node 80 with value of 14.95e3 psi.

Validation of Hand Calculation:

	Longitudinal Stress
	(psi)
FEA result	14.95e3
Hand Calc result	14.94e3

The FEA results match the results of hand calculation. Hence, validated.

4.2 To study the effect of Pressure change in floor to frame joint:

***CASE A*: Pressure equivalent to 8000ft altitude**

Input Conditions:

1. Dimensions of cylinder
   a. Radius = 113 in
   b. Length = 72 in (24 in* 3 frames)
   c. Number of bays: 3

2. Loads/ Boundary conditions
   A local cylindrical coordinate system is created to apply boundary conditions.
   a. Both ends of fuselage are constrained in tangential direction
   e. One end of fuselage is constrained in axial direction to simulate open cylinder case.
   f. Pressure is applied at inner surface = 12.3 psi
   g. Axial force is applied at one end of the fuselage = 1.238E5 lb

3. Material properties
   a. Aluminum
   b. Young's Modulus = 10.3E06 psi
   c. Poisson's ratio = 0.33

4. FE details
   a. Number of stringers = 80 along the circumference
   b. Floor beam and frames are discretized into shell element (4 noded) and bar element (2 noded) on its both top and bottom surface.
   c. Shell element (4 noded element) and 1D bar element (2 noded element) are used for analysis.

5. Type of Analysis: Static

   The Obtained Plots are scaled up to the factor of 100.

Deformation Plot:

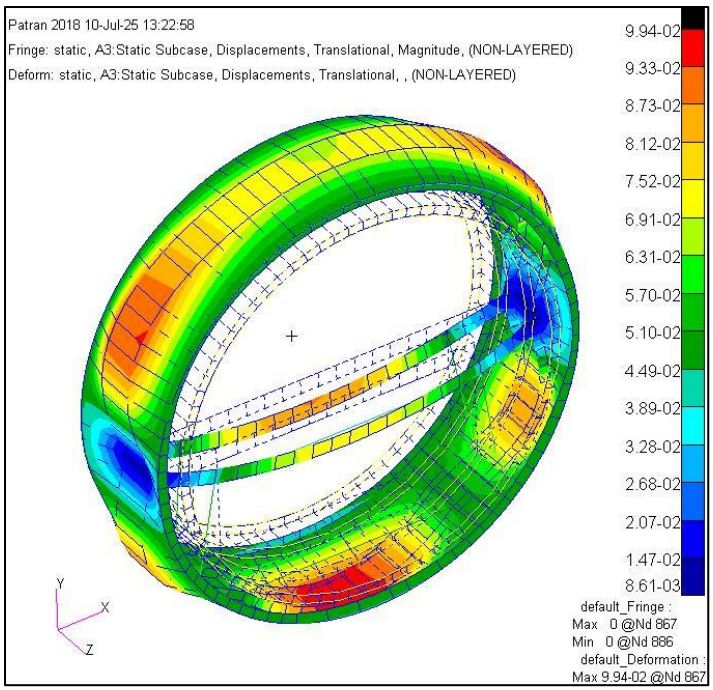

Scale Factor=100

The deformation plot shows a gradient with color contour (blue) indicating minimal displacement at the floor beam and stanchion attachment point, transitioning to high displacement(red/orange) in the mid-bay region.

Resultant Deformation:

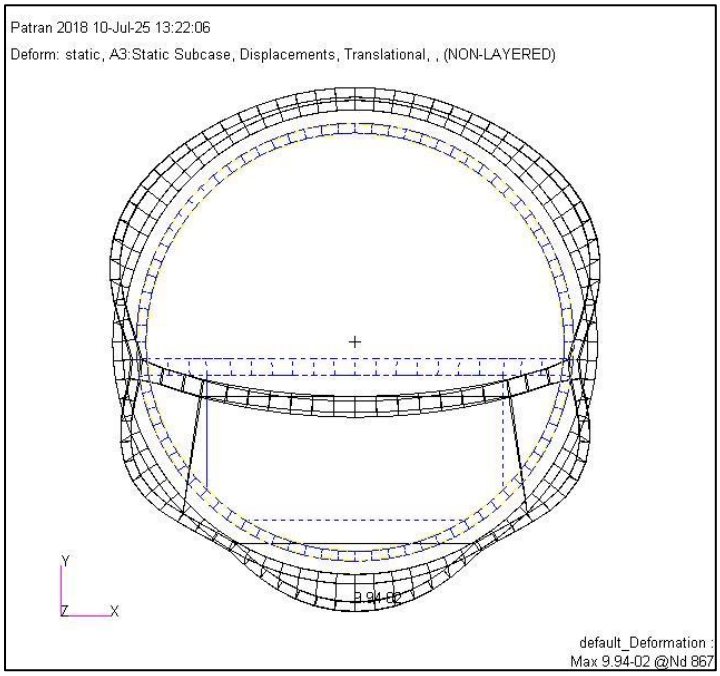

Scale Factor=100

At the floor beam and stanchion positions, the fuselage structure exhibits minimal movement. These acts as anchor points that resist expansion. As the loading and geometry is symmetric, the plot will reflect this, with mirrored deformed patterns on either side of the fuselage centerline.

CASE B: Pressure equivalent to 6000ft altitude

Deformation Plot:

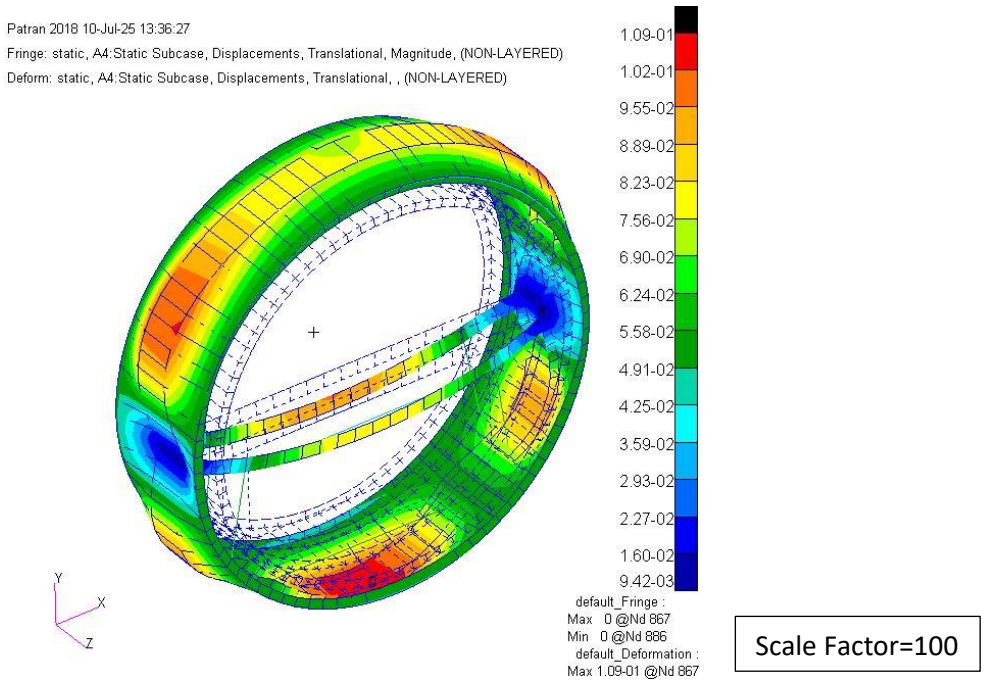

Scale Factor=100

The overall pattern of the displacement plot remains the same – minimum at floor to frame joint, maximum at the mid-bay- but the magnitude of displacement at each point increases due to increased pressure differential.

Resultant Deformation:

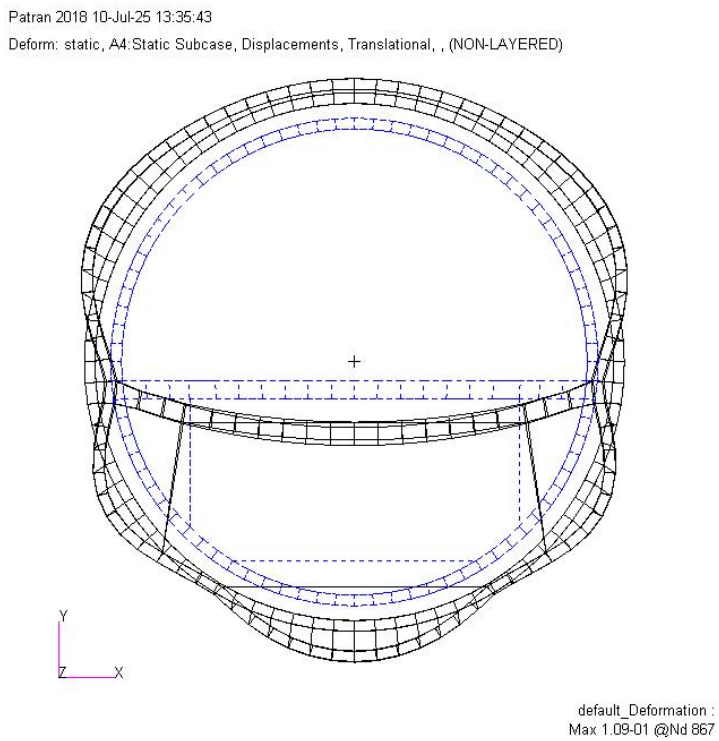

Scale Factor=100

The deformed shape will show more pronounced bulging between supports. The fuselage exhibits amplified bulging in the mid-bay region due to higher pressure differential.

Results & Conclusions: Interface loads at Floor-Frame Joint

S.No	Altitude (ft)	Pressure (psi)	Fx (lb)	Fy (lb)	Mz (lb-in)
			Lateral direction	Vertical Direction	About axial direction
1	8000	10.92	4494	591	11251
2	6000	11.8	4918	646	12313
	% Change		9.4	9.4	9.4

Lowering the cabin pressure to 6000ft increases the structural load on the fuselage, leading to greater displacement and more pronounced deformation in unsupported regions. Thus, the structural design must account for the highest expected pressure differential to ensure safety and limit excessive deformation.

Achieving this comfort requires strengthening the fuselage to handle higher loads. If the airplane is designed to maintain cabin pressure equivalent to 6000 ft height, the floor to frame joint needs to size for ≈9.4% higher load.

5. CASE STUDY#2 – Thermal loads

5.1To study the effect of temperature, rise in beam attached to spring at end

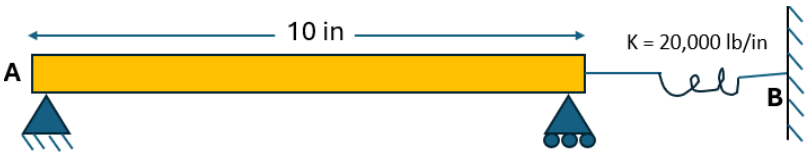

Considered Parameters:

1. Dimensions of Bar
   a. Length: 10 in
   b. Area: 0.1*0.1 in^2
2. Material Properties
   <u>Aluminum</u>
   a. Young's Modulus = 10.3E06 psi
   b. Alpha= 12.3E-06 in/in/F
   <u>Spring</u>
   c. K = 20,000 lb/in
3. Change in temp = (160 – 70) F

5.1.1 Perform hand calculations to determine the reaction forces and deformation of a beam attached to spring at one end subjected to change in temperature.

$$\Sigma F_x = 0$$

$$P_A - P_B = 0$$

$$P_A = P_B$$

$$\delta_{actual} = \delta_{free\ expansion} - \delta_{restrained}$$

$$\frac{P_B}{K} = L\alpha\Delta T - \frac{P_A L}{AE}$$

$$P\left[\frac{1}{K} + \frac{L}{AE}\right] = L\alpha\Delta T$$

$$\boxed{P = \frac{L\alpha\Delta T}{\frac{1}{K} + \frac{L}{AE}}}$$

$$P = \frac{10 \times 12.3 \times 10^{-6} \times 90}{\frac{1}{20{,}000} + \frac{10}{0.1 \times 0.1 \times 10.3 \times 10^{6}}}$$

$$\boxed{P_A = P_B = 75.26 \text{ lb}} \longrightarrow \text{Reaction forces}$$

$$\delta_{actual} = L\alpha\Delta T - \frac{P_A L}{AE}$$

$$= 10 \times 12.3 \times 10^{6} \times 90 - \frac{75.26 \times 10}{0.1 \times 0.1 \times 10.3 \times 10^{6}}$$

$$\boxed{\delta_{actual} = 3.76 \times 10^{-3} \text{ in}} \longrightarrow \text{Deflection}$$

Results Obtained,

1. Reaction Forces = 75.26 lb
2. Deflection = 3.76e-3 in

5.1.2 FEA analysis of bar attached to spring at one end

Input Conditions:

1) Dimensions of Bar
    - Length: 10 in
    - Area: 0.1*0.1 in^2
2) Boundary Conditions:
    - Fixed at A and B
    - Change in temp = (160 – 70) F
3) Material Properties

   Aluminum
    - Young's Modulus = 10.3E06 psi
    - Alpha= 12.3E-06 in/in/F

   Spring
    - K = 20,000 lb/in
4) FE Details
    - 1D Bar element discretized into 3 elements and 4 nodes
    - 1 Spring element with 2 nodes
5) Analysis type: Static

Results and Conclusions:

Displacement Plot

Validation of Hand Calculation:

	Reaction at Point A &B	Deflection
	(lb)	(in)
FEA Result	75.3	0.0037
Hand Calculations	75.26	0.0036

FEA results match Hand calculation results. Hence, validated.

5.2 Study the effect of change in floor material in thermally induced load at joint.

When an aircraft fuselage is subjected to temperature changes, all structural elements expand and contract according to their coefficient of thermal expansion.
The floor frame joint is a critical location. Any differential expansion here can cause local stress concentration and affect displacement and deformation.

Case A: Floor beam having same material as fuselage

Resultant Deformation:

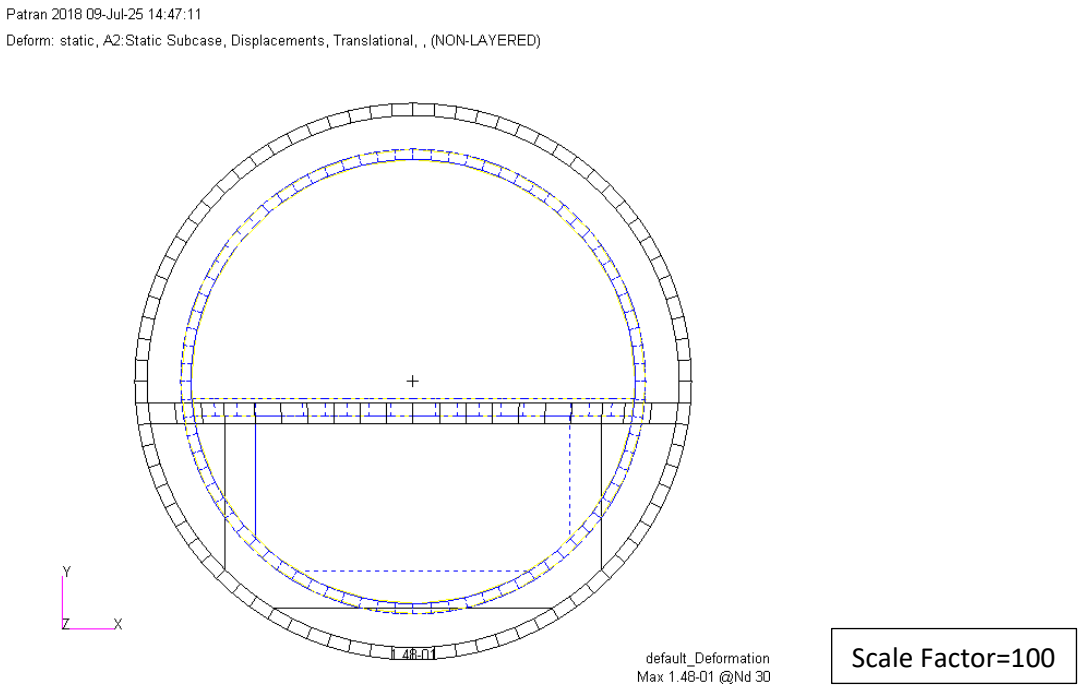

Scale Factor=100

Deformation Plot

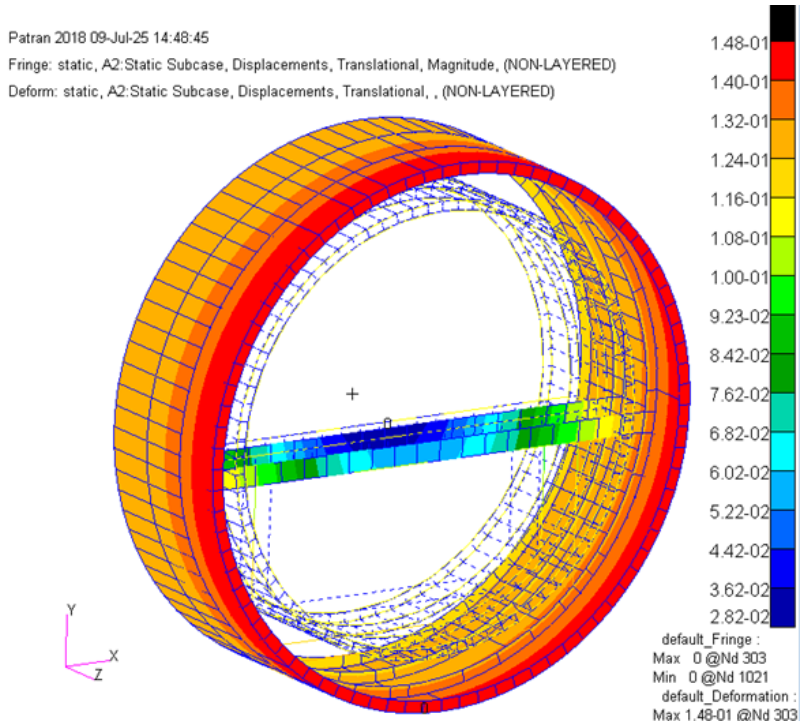

Scale Factor=100

Observations from FEA Results:

- Material Behavior:
  Both Fuselage and floor beam expand/contract equally with temperature changes.
- Displacement Plot:
  The FEA displacement plot shows uniform expansion. The entire structure expands smoothly, with minimal relative movement at floor frame joint.
- Deformation Shape:
  No significant distortion occurs at the joint. There is uniform change in size.
- Load at the floor frame joint:
  Minimal stress is developed at the joint, as there is no differential movement.

Case B: Floor Beam with the material having thermal Coefficient equal to half of the baseline Material

Resultant Deformation

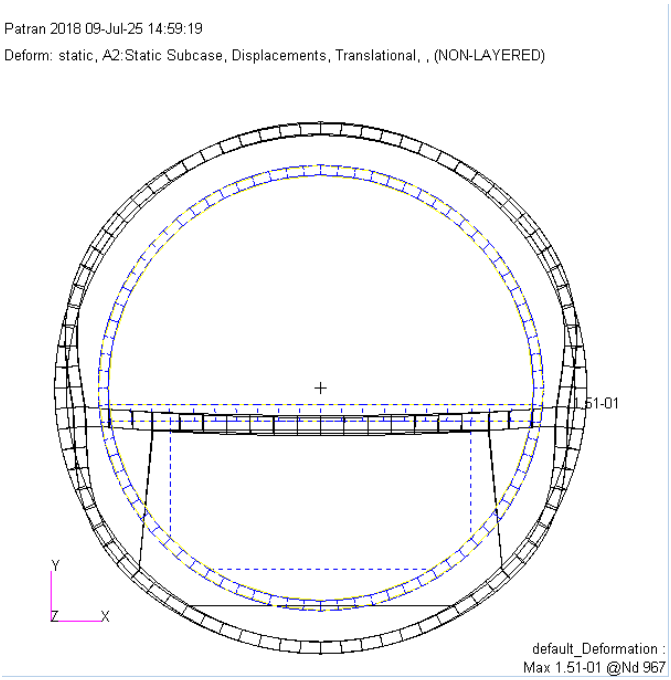

Scale Factor=100

Deformation Plot

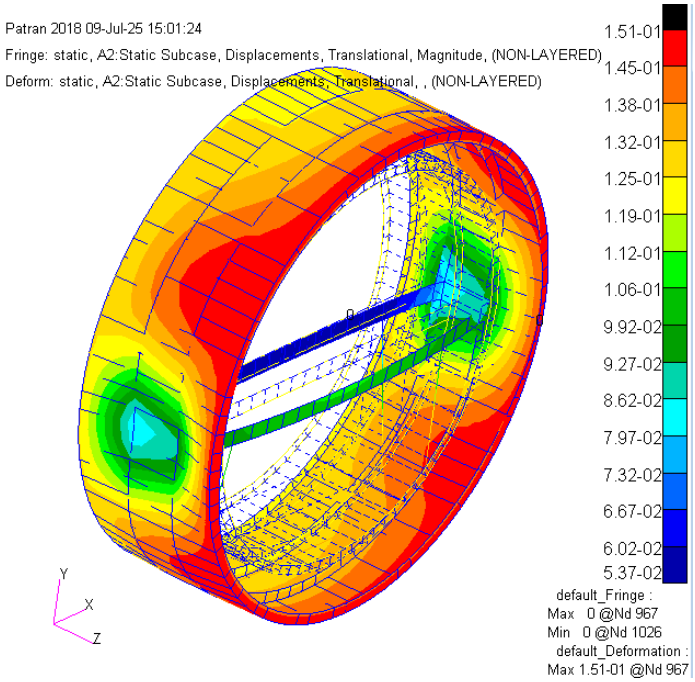

Scale Factor=100

Observations from FEA Results:

- Material Behavior:
  The floor beam expands half as much as the fuselage for the same temperature change.

- Displacement Plot:
  - The plot shows lower displacement in the fuselage at the frame-floor joint.
  - At the frame-floor joint, there is a different color gradient indicating the discontinuity in the displacement.

- Resultant Deformation:
  - The fuselage skin shows substantial expansion, while the floor beam remains relatively static.
  - The joint area shows local bending.

- Load at the floor-frame joint:
  Higher loading can be witnessed in the floor-frame joint point.

Case C: Floor Beam with the material having thermal Coefficient equal to quarter(1/4th) of the baseline Material

Resultant Deformation:

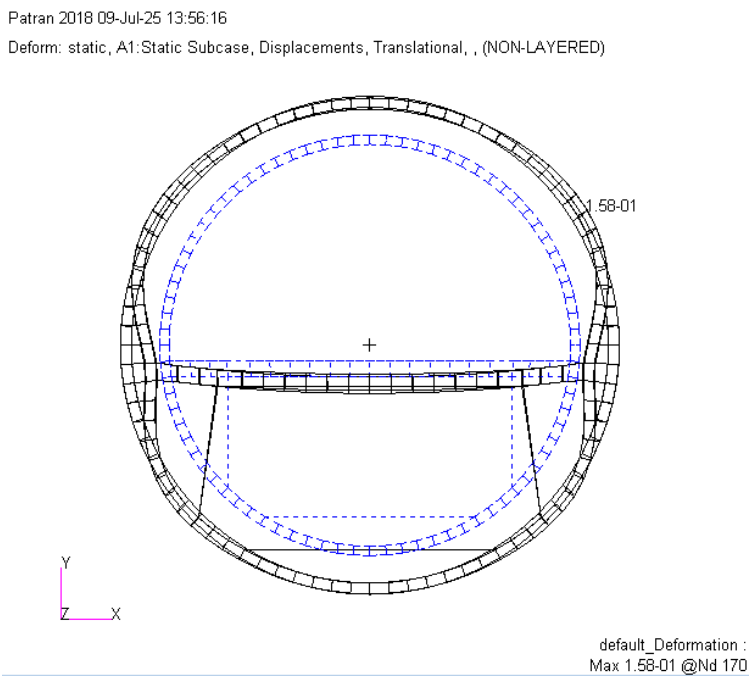

Scale Factor=100

Deformation Plot:

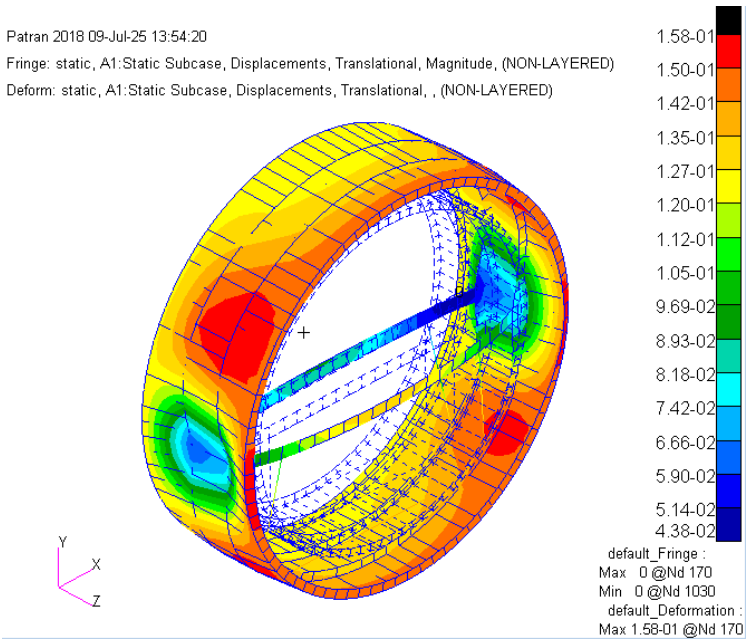

Scale Factor=100

Observations from FEA Results:

- Material Behavior:
  The floor beam expands a quarter as much as the fuselage for the same temperature change.

➢ Displacement Plot:
  - The plot shows lower displacement in the fuselage at the frame-floor joint.
  - At the frame-floor joint, there is a different color gradient indicating the discontinuity in the displacement.

- Resultant Deformation:
  - The fuselage skin shows substantial expansion, while the floor beam remains relatively static.
  - The joint area shows higher local bending.

- Load at the floor-frame joint:
  Highest loading can be witnessed in the floor-frame joint point.

Results and Conclusions

CASE	TCE (in/in/F)	Fx (lb)	Fy (lb)	Mz (lb-in)
	Thermal Coefficient of Expansion (α) x 10^{-6}	**Lateral direction**	**Vertical direction**	**About axial direction**
A (α)	12.3	5.58	0	19
B ($\frac{1}{2}\alpha$)	6.15	3428	263	11761
C ($\frac{1}{4}\alpha$)	3.07	5143	395	17642

- **Material selection**:
  The floor beam of different materials (having different thermal coefficient) leads to significant thermal induced load. The joint fitting and fasteners need to be designed to account for these additional induced loads. The magnitude of load depends on the thermal mismatch between the two components. Thus, the material selection of Floor beam needs to select considering thermal loads as well.
- **Joint design:**
  If different materials must be used, joints should be designed to accommodate differential movement.

6. Future Scope and Improvements:

The future scope and improvements in addressing thermal expansion and joint performance in fuselage structure.

I. **Usage of advanced material:**
Materials like carbon-fiber reinforced thermoplastic polymer composites (CFRTP) offer the ability to tailor thermal expansion properties through fiber orientation and matrix selection. Using these materials allows engineers to match or control the coefficient of thermal expansion at critical joints.

II. Innovative Joint and Assembly Techniques:

- Instead of relying on old traditional riveted joints, new assembly methods such as laser spot welding and conduction welding can be adopted to distribute load more evenly, reducing stress concentration.
- Pre-integrating subassemblies before final fuselage closure streamlines production and improve joint quality and consistency, reducing the risk of thermal expansion induced defects.

The future of Frame-floor joint design lies in the integration of advanced, thermally tailored material and innovative joining techniques. These improvements will lead to lighter, more durable, and more sustainable aircraft structures, with enhanced performance under thermal cycling and reduced maintenance needs.

References

[1] D.Anderson, J. (n.d.). *Introduction to flight, 8th edition, 2016.*

[2] Houghton, E. (n.d.).Aerodynamics for Engineering Students,7th edition, 2015.

[3] https://www.boeing.com/company/general-info#overview

[4] https://investors.boeing.com/investors/news/press-release-details/2025/Boeing-Announces-Second-Quarter-Deliveries/default.aspx

[5] https://en.m.wikipedia.org/wiki/Federal_Aviation_Regulations

[6] http://aero.us.es/adesign/RFP/FAR/FAR25%20-20Transport%20Category%20Airplanes.pdf

[7] Aircraft Structures for Engineering Students" (Seventh Edition) by T.H.G. Megson.

[8] An Introduction to Aircraft Thermal Management" by Mark A. Johnson (SAE International)